UNIVERSITY of NICOSIA

Session:

Decentralized Finance (DeFi)

We are here

Session	Session Name	Professor
1	Introduction to Blockchain and Web3	George Giaglis
2	Bitcoin and Digital Money	Garrick Hileman
3	Ethereum and Programmable Blockchains	Apostolos Kourtis
4	Digital Wallet Security and Privacy	Charles Guillemet **(Ledger)**
5	Decentralized Finance (DeFi)	Lambis Dionysopoulos
6	Prediction Markets	Apostolos Kourtis & Lambis Dionysopoulos
7	The Geopolitics of Cryptocurrency	Garrick Hileman
8	Tokenization and Stablecoins	Lambis Dionysopoulos & Lauren Berta **(Ripple)**
Advanced Track & MSc Students		
9	NFTs and Digital Ownership	Punk6529 & Mohsen El-Sayed **(Ledger)**
10	Regulation and Policy of Digital Assets	Jeff Bandman
11	Advanced Topics in Web3	Apostolos Kourtis
12	The Future: Convergence of Blockchain, AI, and IoT	George Giaglis

This work is released under a Creative Commons Attribution 4.0 International (CC BY 4.0) License © University of Nicosia, Institute for the Future, unic.ac.cy/blockchain

Session Objectives

- Provide a framework for understanding DeFi
- Explain the main features of DeFi, comparing them to those of traditional finance (TradFi)
- Introduce some major elements of DeFi
- Analyze how smart contracts enable DeFi use cases such as trading, lending, staking, and liquidity provision
- Understand the difference between order book–based exchanges and automated market makers (AMMs)

This work is released under a Creative Commons Attribution 4.0 International (CC BY 4.0) License © University of Nicosia, Institute for the Future, unic.ac.cy/blockchain

Agenda

1. Defining DeFi
2. The DeFi stack
3. Decentralized Lending and Borrowing
4. Decentralized Exchanges (DEXes)
5. Conclusions
6. Further Reading

This work is released under a Creative Commons Attribution 4.0 International (CC BY 4.0) License © University of Nicosia, Institute for the Future, unic.ac.cy/blockchain

Session: Decentralized Finance (DeFi)

1. Defining DeFi

Before DeFi: Traditional Finance (TradFi)

We will use the term **TradFi** to refer to the financial services industry, encompassing the management of money, credit, banking, investments, assets & liabilities, etc.

- At the center of TradFi's services and activities lie **centralized** institutions that act as **intermediaries**. So, the term **CeFi**, short for Centralized Finance, may be used as synonymous to TradFi.
- CeFi institutions include central banks, commercial banks, and all types of financial service providers.
- TradFi is based on two main pillars:
  1. **Custodial approach**: assets are entrusted to CeFi entities for safekeeping and management
  2. **Permissioned nature**: only vetted individuals and organizations can participate in the financial system; user activity is closely tied to identity.

The ability to trade with untrusted entities through a trusted intermediary has arguably been a driver of economic growth for centuries.

This work is released under a Creative Commons Attribution 4.0 International (CC BY 4.0) License © University of Nicosia, Institute for the Future, unic.ac.cy/blockchain

Drawbacks of TradFi

- **Financial exclusion:** Affects 1.4-1.5 billion people globally (**24-25%**), with smaller portions of the population in Europe (**~3.6%**) and the U.S. (**~4%**) remaining unbanked and lacking access to traditional financial services.
- **High costs and slow speeds:** Remittances carry high fees, averaging **6-7%**, and can rise to 10.53% when using banks. Transfers are often artificially delayed, increasing inefficiency.
- **Politicization of money*:** Central banks and governments control monetary supply and implement policies such as money creation and capital controls, which can influence currency value, inflation, and overall economic stability.
- **Lack of transparency and systemic risks:** Traditional finance is opaque, leading to information asymmetries, systemic risks, and scandals.
- **Crises and bank runs:** Traditional financial systems are vulnerable to economic crises and sudden withdrawals, destabilizing the system and creating further risk for individuals.

Sources: *Does apolitical money exist?, https://www.worldbank.org/en/publication/globalfindex, https://www.fdic.gov/household-survey, https://remittanceprices.worldbank.org/sites/default/files/rpw_main_report_and_annex_q125_1_0.pdf

This work is released under a Creative Commons Attribution 4.0 International (CC BY 4.0) License © University of Nicosia, Institute for the Future, unic.ac.cy/blockchain

DeFi defined

DeFi is a collection of decentralized, open-source, peer-to-peer financial services built on blockchain technology, minimizing reliance on third parties like banks.

- Unlike fintech, which enhances traditional finance, DeFi enables financial activities such as lending, borrowing, and trading without centralized institutions, **using smart contracts to manage transactions**.
- DeFi **removes intermediaries**, allowing users to interact directly in a trustless environment, aiming to reduce costs and increase efficiency.
- DeFi does not simply replicate traditional financial functions. It **enables new, innovative services and business models** that are not feasible in conventional financial systems.
- Users can retain full control of their assets, eliminating the need for custodial services.
- DeFi operates 24/7 without the need for banking hours or delays in processing, offering global accessibility.

This work is released under a Creative Commons Attribution 4.0 International (CC BY 4.0) License © University of Nicosia, Institute for the Future, unic.ac.cy/blockchain

DeFi characteristics

Features that differentiate public blockchains (on which DeFi runs) from the private networks used in TradFi:

- **Open/permissionless & censorship-resistant:** Public blockchains allow unrestricted access to DeFi, with no need for identity proof or authorization, and no single entity can block valid transactions.
- **Peer-to-peer transactions**: Transactions occur directly between users, eliminating the need for intermediaries.
- **Decentralized validation**: Transaction validation is distributed among independent network participants, ensuring no central authority controls the process.
- **Public transparency**: All transactions and state changes are publicly accessible and verifiable by anyone.
- **Immutable records**: Once recorded, transactions cannot be modified, ensuring tamper-proof records.
- **Borderless operations**: DeFi operates globally without geographical restrictions, allowing anyone with internet access to participate.

This work is released under a Creative Commons Attribution 4.0 International (CC BY 4.0) License © University of Nicosia, Institute for the Future, unic.ac.cy/blockchain

DeFi is constantly growing

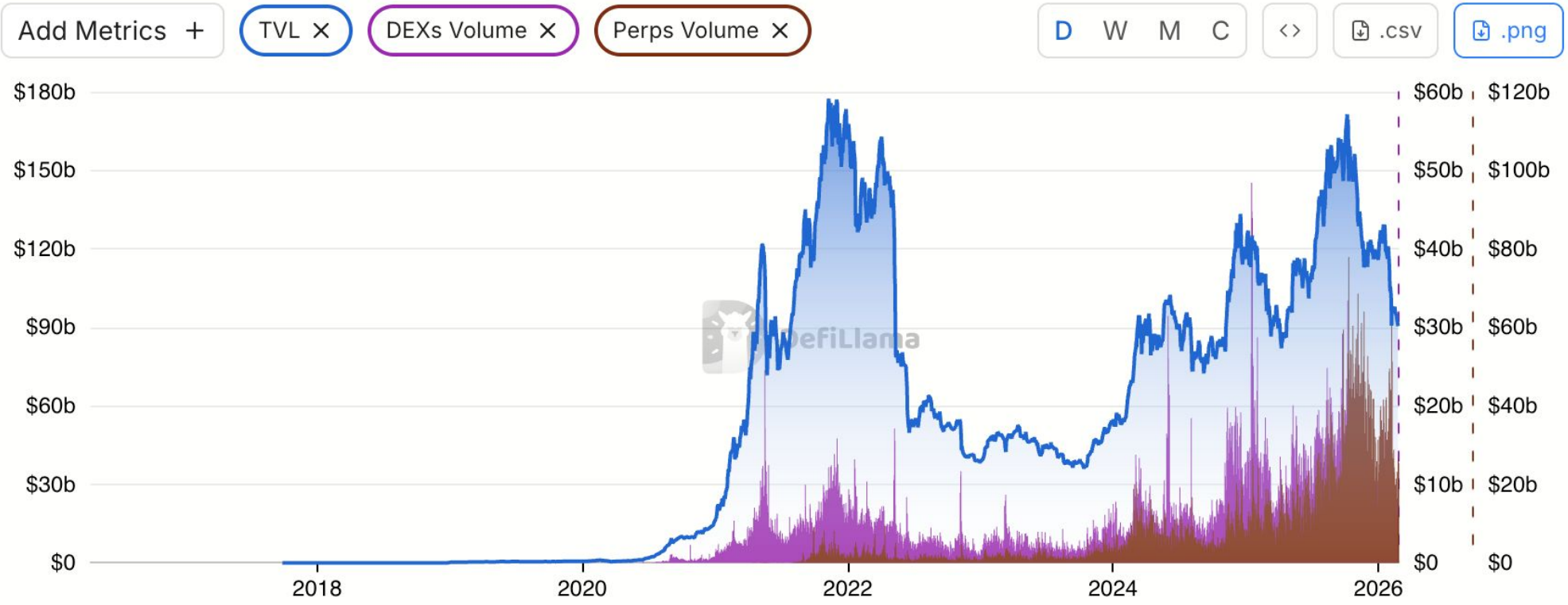

Source: https://defillama.com

This work is released under a Creative Commons Attribution 4.0 International (CC BY 4.0) License © University of Nicosia, Institute for the Future, unic.ac.cy/blockchain

Session: Decentralized Finance (DeFi)

2. The DeFi stack

DeFi apps can be considered at different layers of abstraction

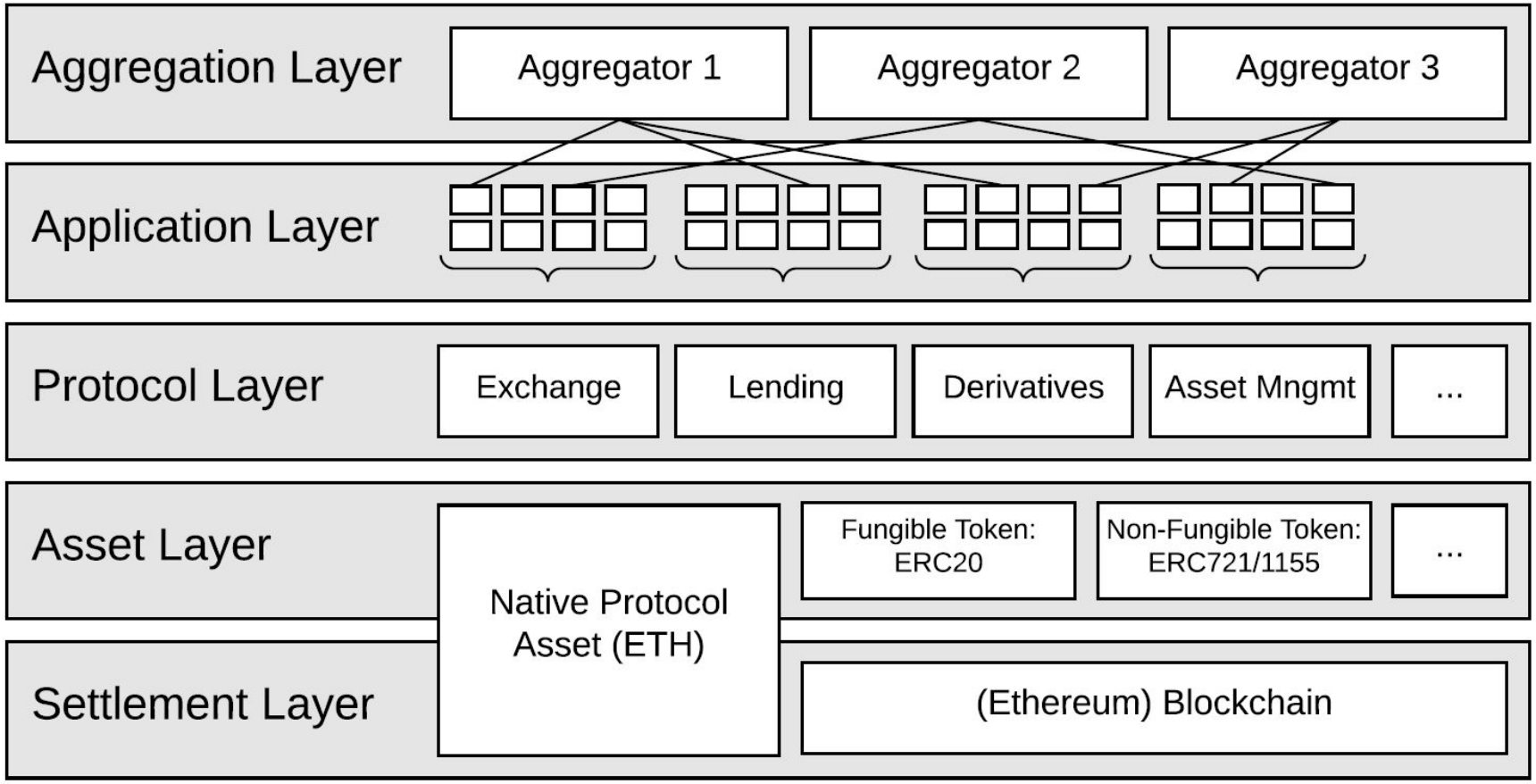

Source : Decentralized Finance (DeFi): On Blockchainand Smart Contract-based Financial Markets

This work is released under a Creative Commons Attribution 4.0 International (CC BY 4.0) License © University of Nicosia, Institute for the Future, unic.ac.cy/blockchain

The Settlement Layer is where transactions are ultimately settled

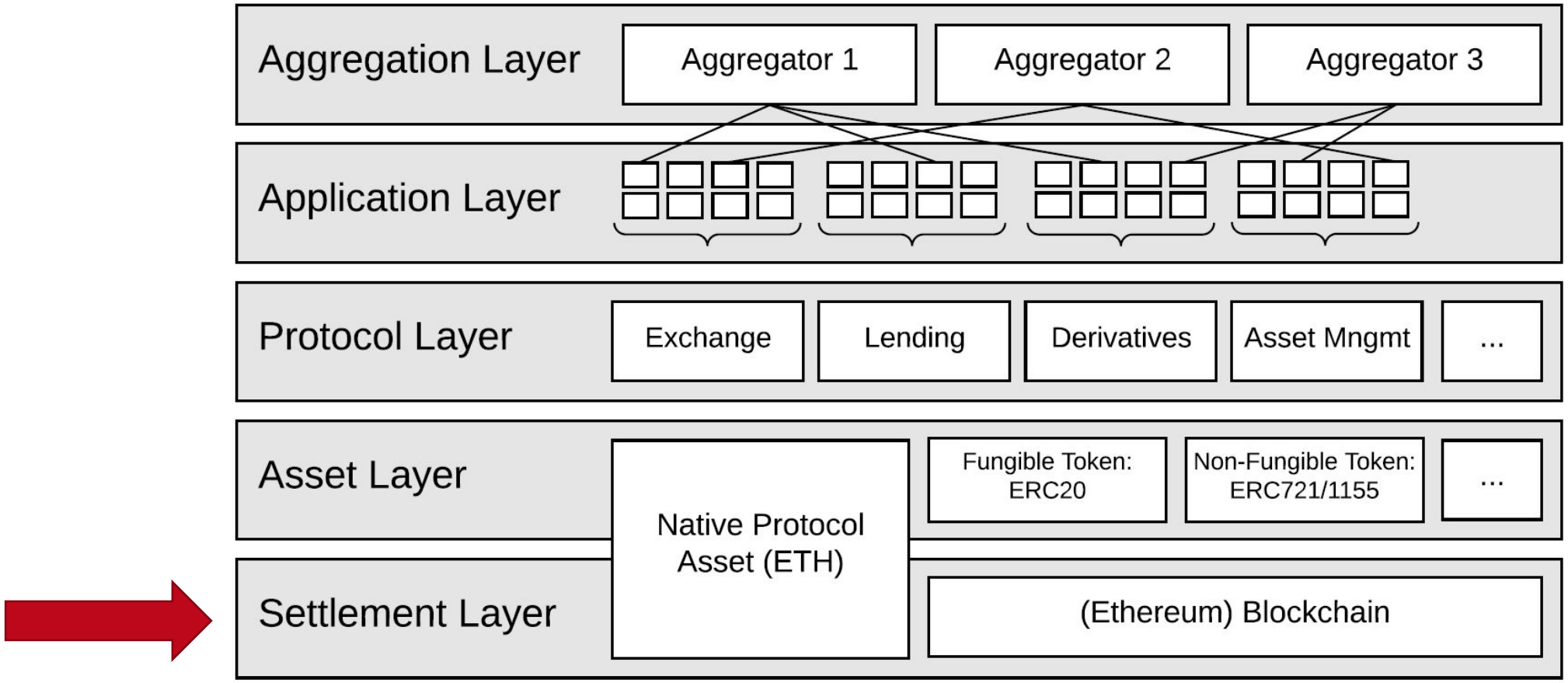

Source : Decentralized Finance (DeFi): On Blockchainand Smart Contract-based Financial Markets

This work is released under a Creative Commons Attribution 4.0 International (CC BY 4.0) License © University of Nicosia, Institute for the Future, unic.ac.cy/blockchain

The Settlement Layer is DeFi's Layer 1 (L1)

The settlement layer is the **foundation** for all activities in a decentralized ecosystem.

- **It consists of the underlying blockchain, as well as its native asset.**
- For example, in the case of DeFi apps on Ethereum, the settlement layer includes the Ethereum blockchain and Ether (Ethereum's native asset).

Settlement layers:

- **Store** information, value, and ownership **securely**
- Ensure that **status changes** (balances, ownership, etc) follow the blockchain's rules
- Enable **trustless** execution

As settlement is the first layer in the stack, the blockchains are referred to as **Layer 1** (L1) blockchains.

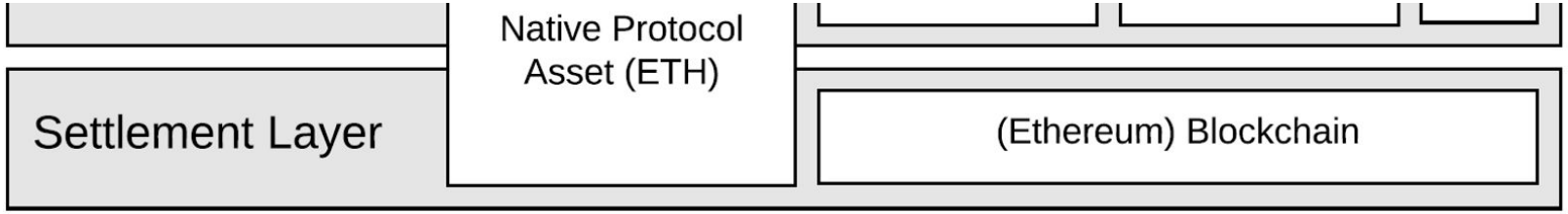

This work is released under a Creative Commons Attribution 4.0 International (CC BY 4.0) License © University of Nicosia, Institute for the Future, unic.ac.cy/blockchain

The Asset Layer includes all tokens used in DeFi apps

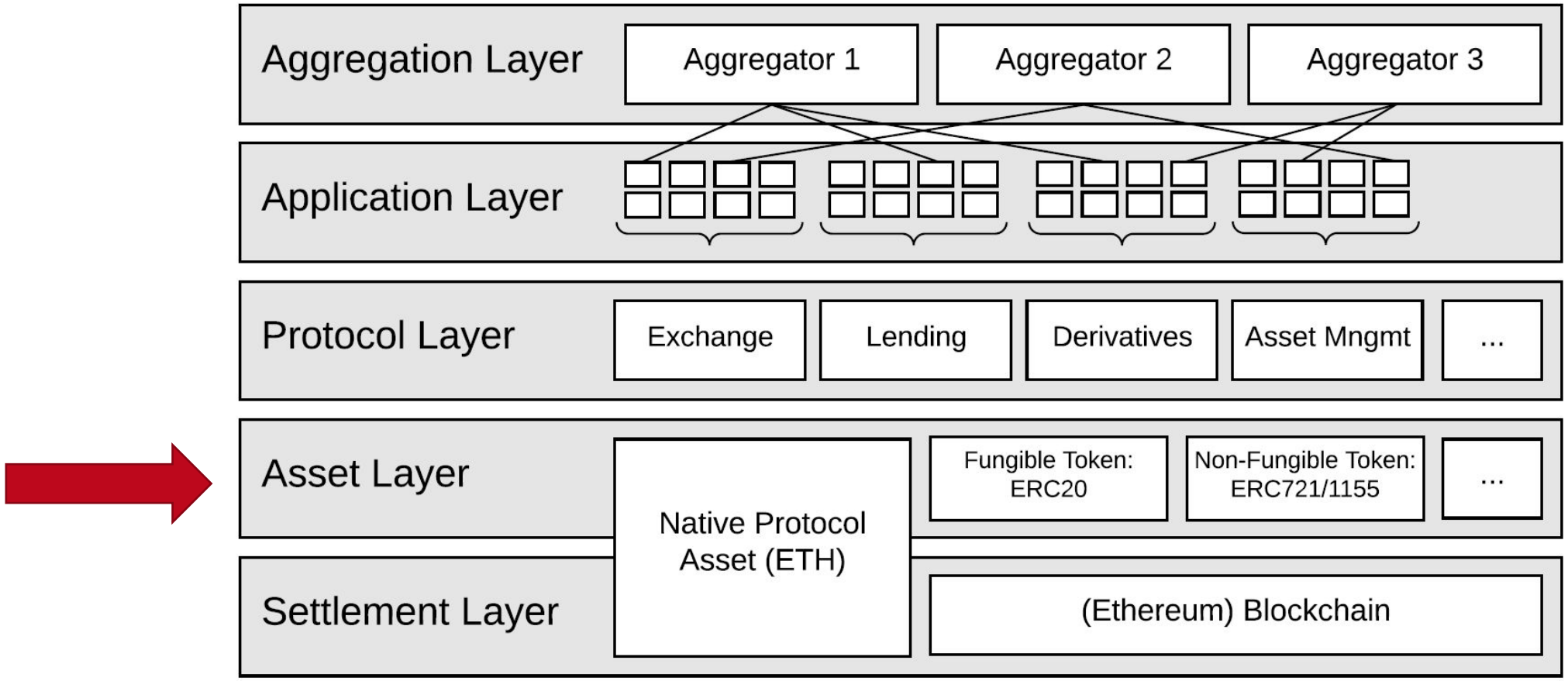

Source : Decentralized Finance (DeFi): On Blockchainand Smart Contract-based Financial Markets

This work is released under a Creative Commons Attribution 4.0 International (CC BY 4.0) License © University of Nicosia, Institute for the Future, unic.ac.cy/blockchain

The Asset Layer refers to both the native (L1) & non-native assets

The asset layer consists of **all assets** that are issued on top of the settlement layer.

- This includes the network's native asset (e.g., in the case of Ethereum, Ether)
- But, also, other tokens that are issued according to L1's rules

Each L1 blockchain has its own rules for token issuance, encapsulated in **standards**

- For example, **ERC20** is Ethereum's standard for fungible tokens, **ERC721** for NFTs, etc.
- Similarly, **SPL** is Solana's fungible token standard, **BEP20** is BSC's, etc.

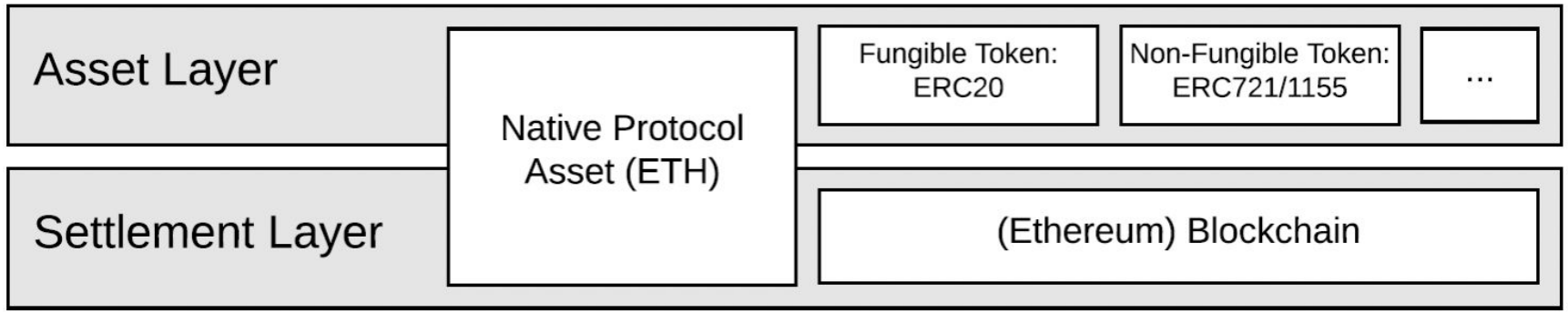

This work is released under a Creative Commons Attribution 4.0 International (CC BY 4.0) License © University of Nicosia, Institute for the Future, unic.ac.cy/blockchain

Native vs. non-native tokens serve different functions

Native tokens

- They are the lifeblood of the L1 blockchain, underpinning its basic functions and fueling all apps built on it.
- Examples: ETH (Ethereum), BNB (BSC), AVAX (Avalanche), SOL (Solana), etc.

Non-native tokens

- All other tokens used in specific applications, serving different functions.
- Examples: UNI (Uniswap, a decentralized exchange), AAVE (Aave, a lending platform), MKR/DAI (Maker), etc.

This work is released under a Creative Commons Attribution 4.0 International (CC BY 4.0) License © University of Nicosia, Institute for the Future, unic.ac.cy/blockchain

Example: Ethereum non-native token standards

ERC-20: The standard for Fungible tokens

- Most widely used for creating interchangeable tokens
- Each token is identical in value and function

ERC-721: For Non-Fungible tokens (NFTs)

- Standard for unique, non-divisible tokens on Ethereum
- Ideal for representing individual assets or collectibles

ERC-1155: Multi-token standard

- Fungible, semi-fungible, and non-fungible tokens
- Aims for computational efficiency & reduced gas costs

ERC-777: Operator based token standard

- ERC20 upgrade, with added functionalities
- Simplifies token transfer and interaction processes

ERC-998: Composable NFT standard

- Allows NFTs to own other NFTs and fungible tokens
- Complex ownership structures & asset hierarchies

ERC-223: Transfer and Call token standard

- Allows token transfers to execute contract code
- Aims to prevent token losses in contract transfers

You can find a list of all Ethereum token standards here.

This work is released under a Creative Commons Attribution 4.0 International (CC BY 4.0) License © University of Nicosia, Institute for the Future, unic.ac.cy/blockchain

The Protocol Layer is where most DeFi apps lie

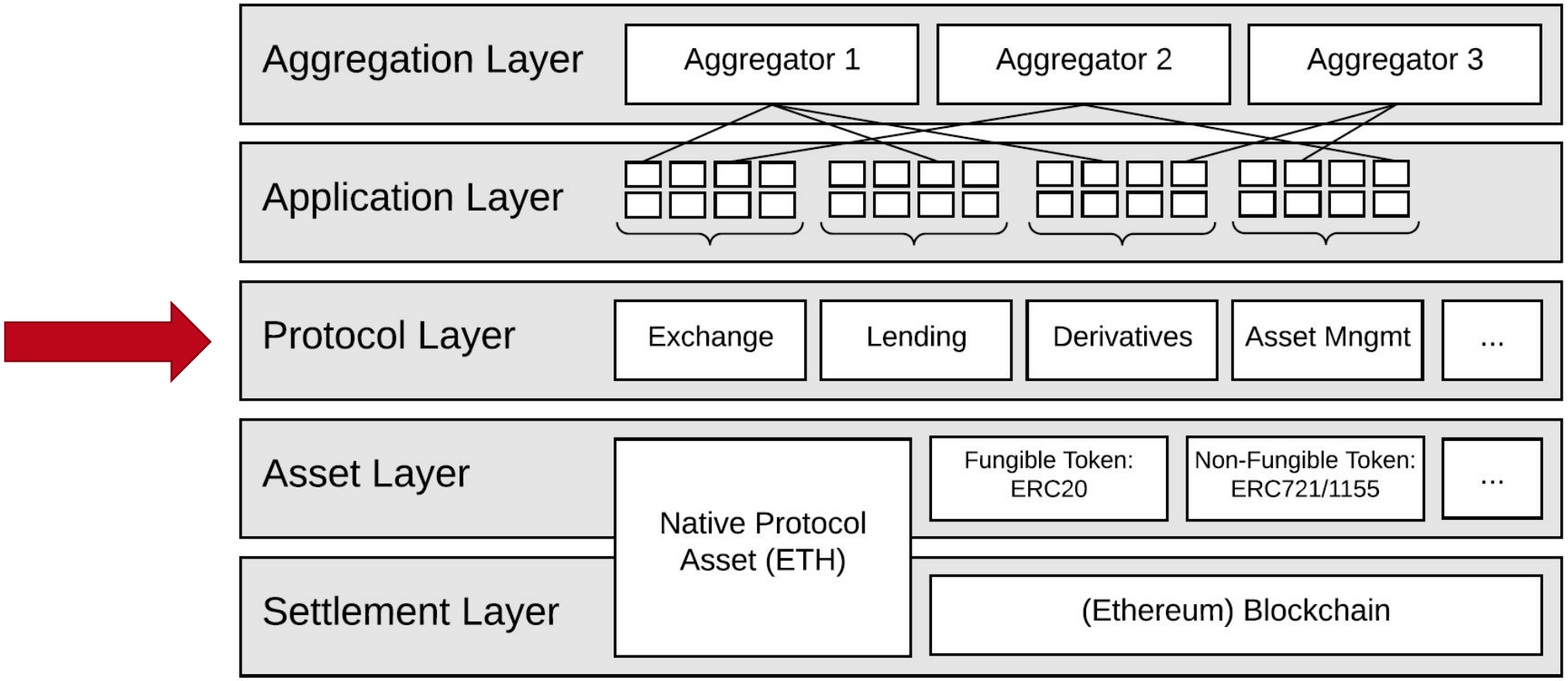

Source : Decentralized Finance (DeFi): On Blockchainand Smart Contract-based Financial Markets

This work is released under a Creative Commons Attribution 4.0 International (CC BY 4.0) License © University of Nicosia, Institute for the Future, unic.ac.cy/blockchain

The Protocol Layer includes the core functionality of dApps

Heart of Decentralized Applications (dApps)

- Hosts the essential functionalities of dApps, particularly in the DeFi sector.
- dApps are executed through smart contracts on this layer.

Implementation and interaction

- Smart contracts form the backbone of dApps.
- Users typically engage with these contracts via familiar Web2 interfaces, linking to the Application Layer.

Diverse functionalities within the Protocol Layer

- Facilitates decentralized exchanges (DEXes) for direct, peer-to-peer asset trading.
- Enables lending and borrowing platforms for DeFi transactions.
- Supports complex financial instruments like derivatives.
- Includes applications such as stablecoins, yield farming, liquidity pools (LPs), prediction markets, insurance, and asset management tools.

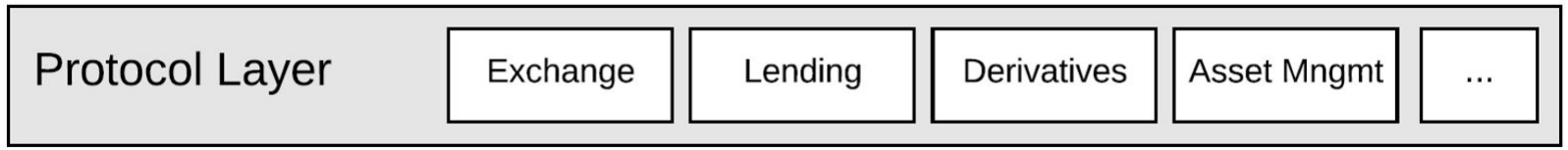

This work is released under a Creative Commons Attribution 4.0 International (CC BY 4.0) License © University of Nicosia, Institute for the Future, unic.ac.cy/blockchain

Application Layer

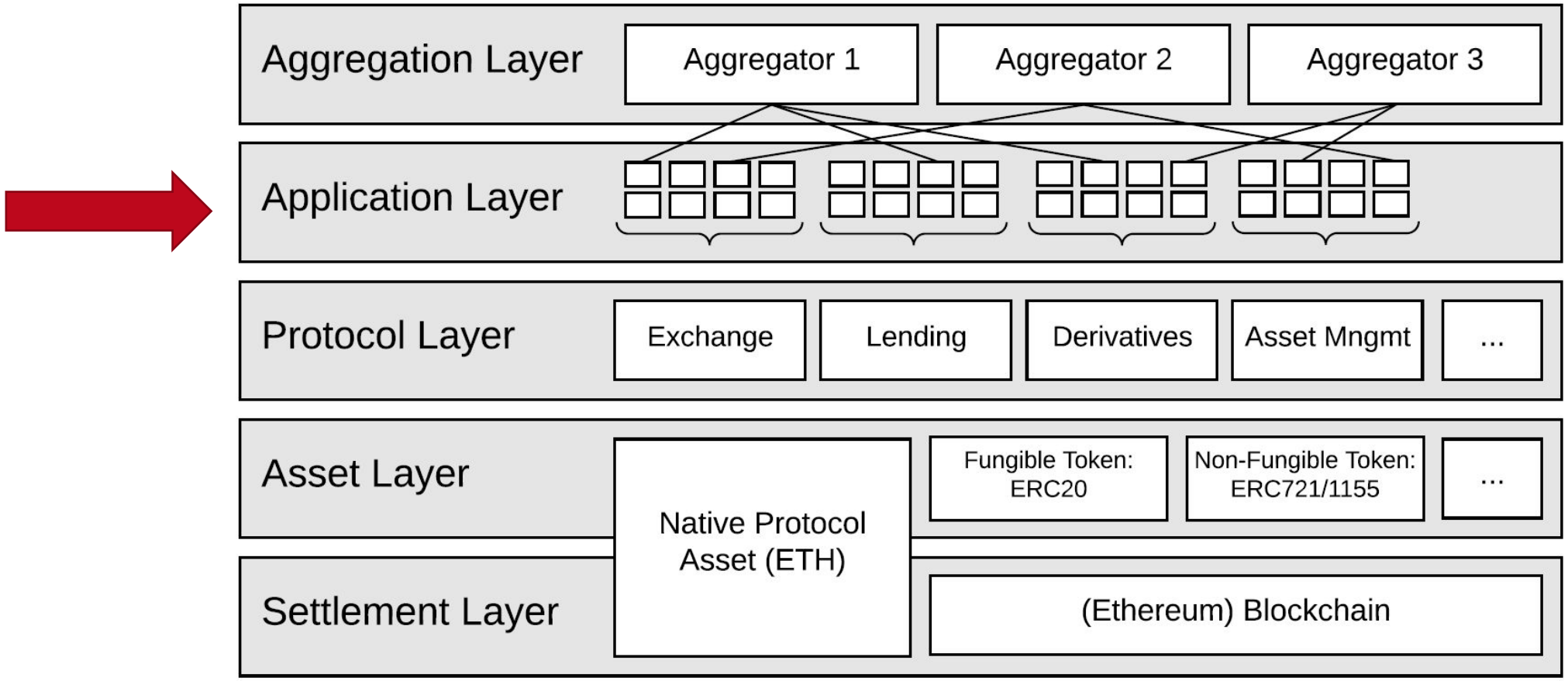

Source : Decentralized Finance (DeFi): On Blockchainand Smart Contract-based Financial Markets

This work is released under a Creative Commons Attribution 4.0 International (CC BY 4.0) License © University of Nicosia, Institute for the Future, unic.ac.cy/blockchain

The Application Layer enables most users to access DeFi apps

Gateway to DeFi for users

- Designed for users who don't directly engage with the Protocol Layer or smart contracts.
- Provides a user-friendly interface, making DeFi accessible to a broader audience.

Simplifying DeFi interactions

- DeFi applications offer intuitive User Interfaces (UIs) for ease of use.
- These interfaces cater to non-experts, simplifying complex financial interactions.

Role and significance

- Acts as the front-end layer, bridging users to underlying DeFi smart contracts.
- Essential for streamlining and demystifying the user experience in DeFi.

While web front-ends are crucial for accessing DeFi apps, **they are not the apps themselves.** These interfaces serve as the visible layer, allowing efficient and user-friendly interaction with complex blockchain protocols.

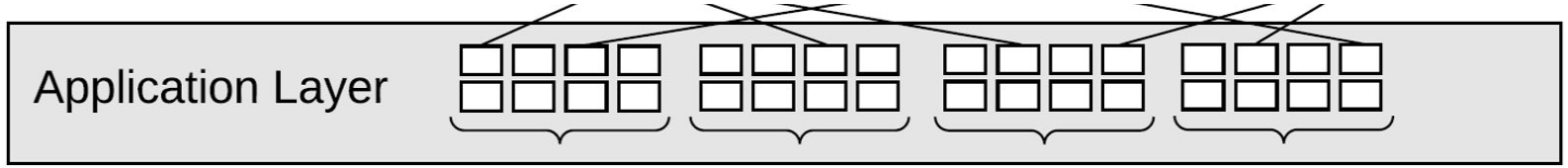

This work is released under a Creative Commons Attribution 4.0 International (CC BY 4.0) License © University of Nicosia, Institute for the Future, unic.ac.cy/blockchain

Aggregation Layer

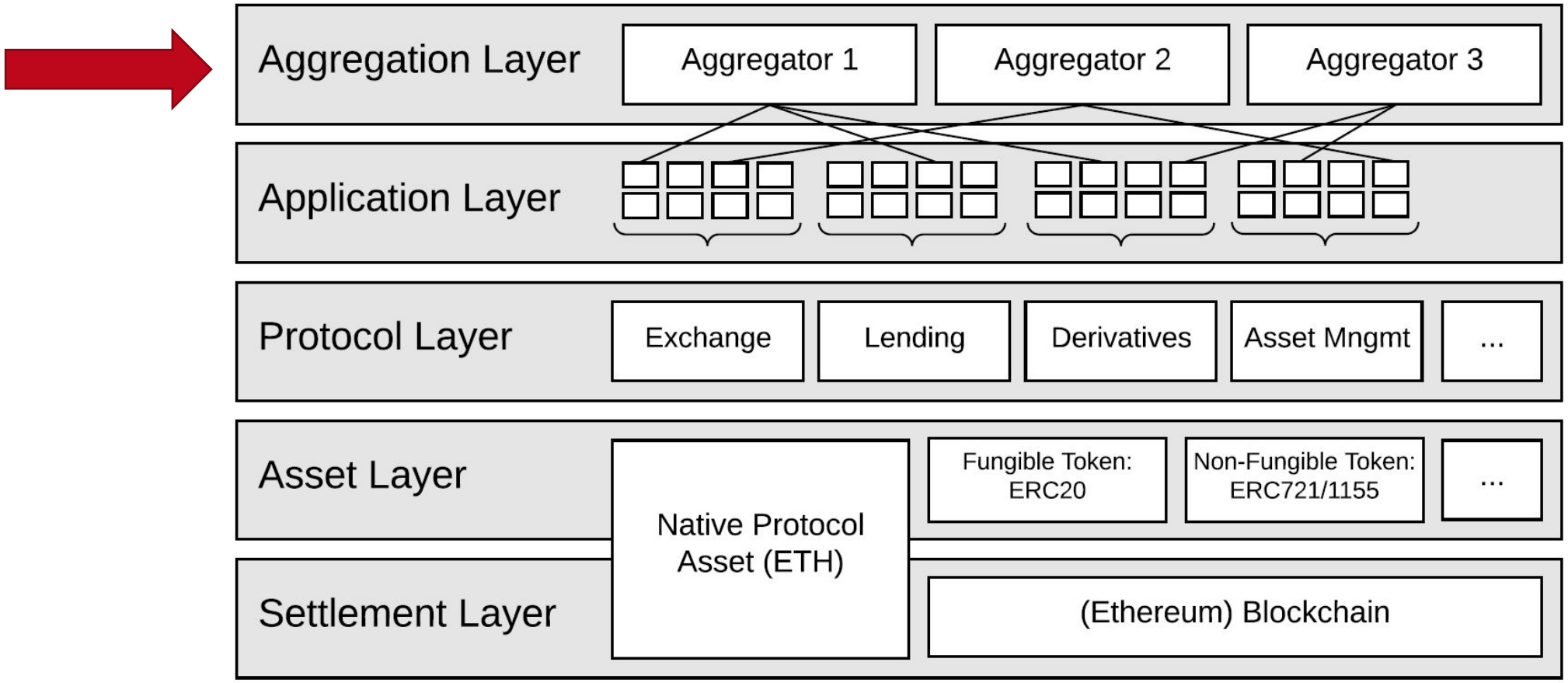

Source : Decentralized Finance (DeFi): On Blockchainand Smart Contract-based Financial Markets

This work is released under a Creative Commons Attribution 4.0 International (CC BY 4.0) License © University of Nicosia, Institute for the Future, unic.ac.cy/blockchain

The Aggregation Layer combines many DeFi apps in a single access

Enhancing user experience in DeFi

- An advanced extension of the application layer, focusing on user interaction.
- Provides web access to underlying DeFi applications, similar to the application layer.

Unifying multiple DeFi protocols

- Aggregators integrate various DeFi services for user convenience.
- They enable easy comparison and cross-functionality among different DeFi protocols.

Examples of aggregators:

- DeBank: Offers a holistic view of users' DeFi assets and liabilities, supporting numerous protocols and facilitating easy portfolio tracking and management.
- Yearn Finance: Automates the process of yield farming, moving funds across different lending protocols to maximize interest earnings for users.

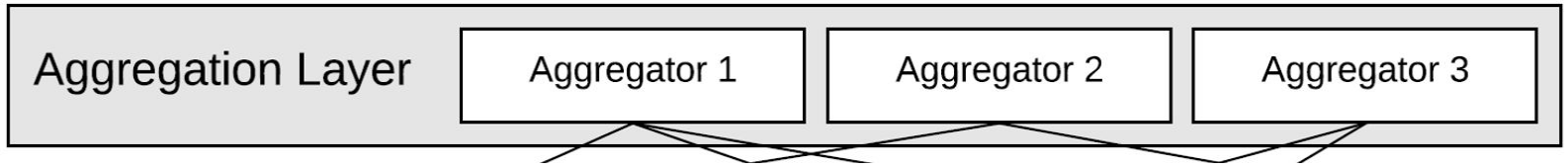

This work is released under a Creative Commons Attribution 4.0 International (CC BY 4.0) License © University of Nicosia, Institute for the Future, unic.ac.cy/blockchain

Session: Decentralized Finance (DeFi)

3. Decentralized Lending and Borrowing

Decentralized lending: overview and benefits

Decentralized lending protocols use smart contracts to enable users to lend and borrow digital assets without relying on traditional financial intermediaries. Interest rates are typically determined algorithmically based on supply and demand.

Advantages of DeFi lending

- Improves capital efficiency by allowing assets to be lent or borrowed directly on-chain.
- Expands access to financial services without requiring traditional banking relationships.
- Enables transparent and programmable financial interactions.
- However, platforms differ in their design, risk management, and level of decentralization.

User participation and access

- Users can supply crypto assets to earn interest.
- Users can borrow assets by providing collateral.
- Loans are secured by collateral rather than credit history.

This work is released under a Creative Commons Attribution 4.0 International (CC BY 4.0) License © University of Nicosia, Institute for the Future, unic.ac.cy/blockchain

Comparing DeFi/TradFi lending and borrowing

Feature	DeFi	TradFi
Creditor	Anyone, human or code (smart contract)	Licensed financial institutions
Debtor	Anyone, human or code (smart contract)	Vetted individuals or businesses
Interest rates	Set algorithmically	Set by central bank and creditors
Collateral	Loans are typically overcollateralized	Loans are typically undercollateralized or unsecured
Maturity	Fixed or Perpetual	Typically fixed
Risks to lender	Platform risk, protocol risk, volatility, governance risk, rug pulls, etc.	Default risk, systemic risk
Risks to borrower	Forced liquidation	Loss of collateral, legal consequences

This work is released under a Creative Commons Attribution 4.0 International (CC BY 4.0) License © University of Nicosia, Institute for the Future, unic.ac.cy/blockchain

TradFi lending can be undercollateralized – but at a cost

In exchange for providing loans, TradFi lenders usually require:

- **Some reward,** typically in the form of **interest rate** (which, in turn, reflects the creditworthiness of the borrower).
- **Some insurance** that the money will be repaid, typically in the form of **collateral, credit history checks and KYC.**
- TradFi lenders can also make borrowers repay by **law**.

For these reasons, lenders can provide **undercollateralized** or even **unsecured loans**: loans where the value of the collateral is less than the value of the loan (or even zero).

- To cover the additional risks/costs for lenders, interest rates in TradFi are typically high.

But what about DeFi lending, where no legal, credit history or KYC processes are typically applied?

This work is released under a Creative Commons Attribution 4.0 International (CC BY 4.0) License © University of Nicosia, Institute for the Future, unic.ac.cy/blockchain

DeFi loans must be overcollateralized

In pseudonymous, permissionless & open finance, it would be reasonable to assume that if the value of the collateral fell below the value of the loan, there would be no incentive to pay back the debt.

- This is known as **moral hazard**

To mitigate this, DeFi loans are typically **overcollateralized**

- In other words, a borrower can only borrow **less** money than the value of their collateral.
- **If the value of the collateral later falls below the outstanding value of the loan, the collateral will be (partially or wholly) liquidated**, i.e., sold in the open market to repay the lender.
- No moral hazard; no need for KYC, credit history checks or calling the authorities.

This work is released under a Creative Commons Attribution 4.0 International (CC BY 4.0) License © University of Nicosia, Institute for the Future, unic.ac.cy/blockchain

Popular decentralized lending and borrowing platforms

Aave

One of the leading decentralized lending platforms

Sky (formerly MakerDAO)

The protocol behind the DAI (now USDS) stablecoin, allowing users to borrow against crypto collateral through Vaults

Compound

A decentralized lending and borrowing protocol on Ethereum that enables users to earn interest or take out crypto loans using collateralized assets

dY dX

A non-custodial decentralized exchange and lending platform that offers margin trading along with borrowing and lending capabilities

This work is released under a Creative Commons Attribution 4.0 International (CC BY 4.0) License © University of Nicosia, Institute for the Future, unic.ac.cy/blockchain

Session: Decentralized Finance (DeFi)

4. Decentralized Exchanges (DEXes)

Decentralized exchanges are smart contracts the mimic CEX functions

DEXes are **dApps** that **facilitate token swaps using smart contracts**, removing the need for a central intermediary. They allow users to buy and sell tokens in exchange for other tokens in a peer-to-peer manner.

Key features of DEXes

- **Peer-to-peer trading:** Enables direct trades between users, cutting out intermediaries like brokers, market makers, and custodians.
- **Self-custody:** Users retain control over their funds, enhancing security and autonomy.

Advantages and integration in DeFi

- **Composability:** DEXes can seamlessly interact with other DeFi applications, fostering a more integrated and versatile financial ecosystem.
- **Interoperability:** Facilitates easy interaction and compatibility with a variety of DeFi applications and protocols.
- **Potential for lower transaction costs:** Theoretically, the absence of intermediaries in DEXes can lead to reduced transaction fees.

This work is released under a Creative Commons Attribution 4.0 International (CC BY 4.0) License © University of Nicosia, Institute for the Future, unic.ac.cy/blockchain

Background: Understanding order books

The basic notion on which a CEX operates is that of an **order book**.

- Conversely, a DEX will typically rely on liquidity pools and automated market makers (AMMs).

To understand the difference, let's first explain what an **order book** is.

- An order book collects the volume of all buy (bid) and sell (ask) orders for an asset.
- The current price of the asset is determined by where bids and asks meet (are matched).

Order books are effective in **liquid markets** as they minimize **slippage** (the difference between the expected and actual price of a trade).

- CEX liquidity is provided by **market makers (MMs)**, whose job is to maintain a stream of bid and ask orders in the book.

This work is released under a Creative Commons Attribution 4.0 International (CC BY 4.0) License © University of Nicosia, Institute for the Future, unic.ac.cy/blockchain

Example: A snapshot of an order book

Current time is *10:05:03*

ASK (SELL)	
Ask Price	**Sell Size**
11.42	950
11.41	1300
11.40	1105
11.39	1500
11.38	450

BID (BUY)	
2650	11.36
1050	11.35
1050	11.34
1500	11.33
700	11.32
Bid Size	**Buy Price**

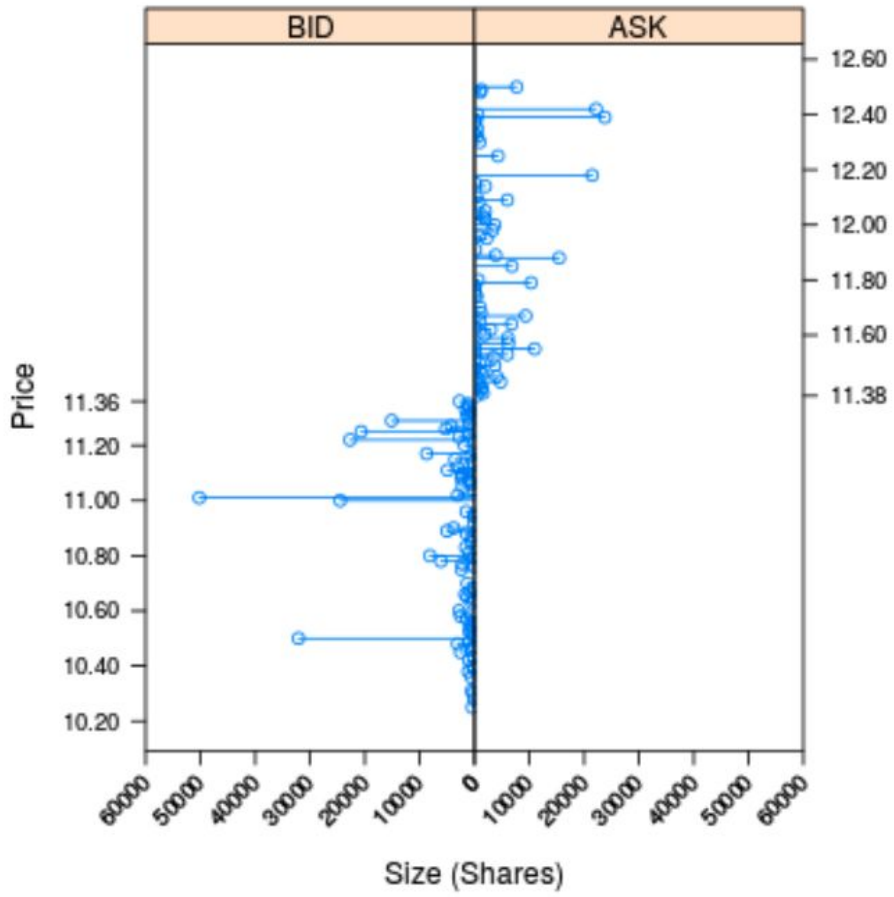

This work is released under a Creative Commons Attribution 4.0 International (CC BY 4.0) License © University of Nicosia, Institute for the Future, unic.ac.cy/blockchain

It is, however, very difficult to build a DEX using order books

Posting orders would require on-chain transactions, which cost gas fees. The same would be true for cancelling orders.

- As a result, on-chain orders would become very expensive
- Especially for **markets makers (MMs) and high-frequency traders (HFTs)**.

Given that MMs/HFTs are important for efficient market operations, an order book-based DEX would probably be **illiquid**.

- Illiquidity translates to **high slippage, lost trades and inefficient price discovery**.

These problems would be exacerbated by the **time delay** introduced by block confirmation times.

- Transactions need to be confirmed on the blockchain, which, among others, opens the possibility for **front running** trades.

This work is released under a Creative Commons Attribution 4.0 International (CC BY 4.0) License © University of Nicosia, Institute for the Future, unic.ac.cy/blockchain

Solution: Replace order books with liquidity pools

A liquidity pool is a reserve of funds held in a smart contract.

- LPs are one of the **foundational mechanisms** in DeFi.
- They are essential, not only in DEXes, but also in dLending/dBorrowing, synthetic assets, insurance, etc.

LPs aim to overcome the liquidity trap in decentralized trading by **always ensuring sufficient liquidity**.

- **Bancor** was the first protocol that utilized LPs, but they were popularized by **Uniswap**.
- Other popular DEXes that use LPs are **Curve** (multi-blockchain), **Pancakeswap** (BSC), **Balancer** (Ethereum), etc.

In LP-based DEXes, anyone can become a market maker by providing liquidity for a token pair.

- This also means that there are **no listing requirements**, such as those found in CEXes.

This work is released under a Creative Commons Attribution 4.0 International (CC BY 4.0) License © University of Nicosia, Institute for the Future, unic.ac.cy/blockchain

Automated market makers (AMMs)

- **AMMs** are decentralized exchanges that use **smart contracts and liquidity pools** instead of order books.
- Users trade directly against pooled assets, with **prices determined algorithmically**.
- Liquidity providers deposit tokens into pools and earn fees from trades.
- Prices are determined by **mathematical formulas based on token reserves**.
- AMMs are permissionless, allowing anyone to trade or provide liquidity without intermediaries.

This work is released under a Creative Commons Attribution 4.0 International (CC BY 4.0) License © University of Nicosia, Institute for the Future, unic.ac.cy/blockchain

Constant Product Market Maker (CPMM) → $(x \cdot y = k)$

- The **constant product model ($x \cdot y = k$)** is the most widely used AMM mechanism, introduced by Uniswap with the launch of its first version (v1).
- It maintains an invariant product between the reserves of two tokens, where **x** and **y** represent the quantities of each token and **k** is constant.
- Prices are determined algorithmically **by the ratio of the token reserves**. When a trade occurs, the reserve ratio changes, and the AMM automatically adjusts the exchange rate accordingly.
- For example, when Alice swaps ETH for USDC, she adds ETH to the pool and removes USDC. This increases the ETH reserve and decreases the USDC reserve, causing the price of ETH in terms of USDC to increase.

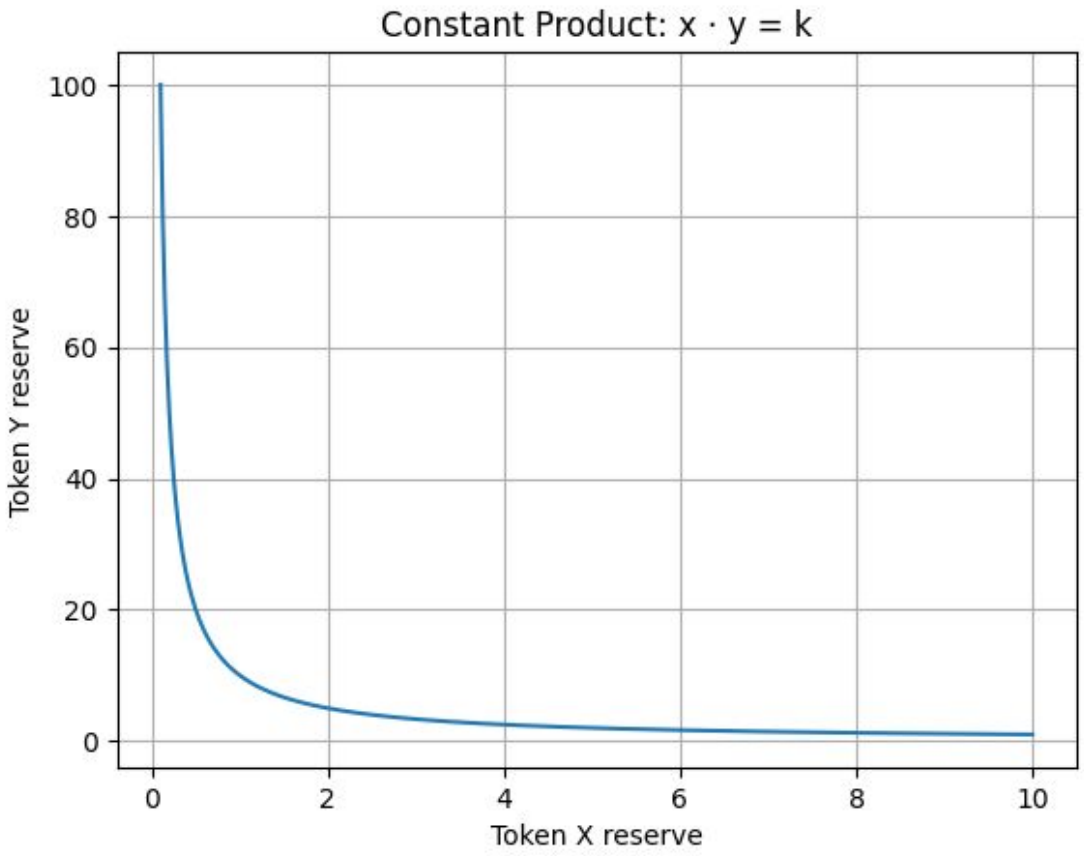

This work is released under a Creative Commons Attribution 4.0 International (CC BY 4.0) License © University of Nicosia, Institute for the Future, unic.ac.cy/blockchain

Advanced AMM Models

Multiple AMM designs exist, including **very advanced models** such as:

- Curve Finance v2 (Cryptoswap): Uses a hybrid invariant combining constant product and StableSwap, allowing efficient trading for both stablecoins and volatile assets with lower slippage.
- Uniswap v4: Introduces customizable liquidity pools (“hooks”), enabling flexible logic such as dynamic fees, automated strategies, and advanced liquidity management.

However, the constant product model **remains the foundation** for understanding AMMs.

This work is released under a Creative Commons Attribution 4.0 International (CC BY 4.0) License © University of Nicosia, Institute for the Future, unic.ac.cy/blockchain

Session: Decentralized Finance (DeFi)

5. Conclusions

Conclusions

- DeFi is transforming the financial landscape by allowing users to access financial services in a decentralized, peer-to-peer manner.
- Key DeFi characteristics include: open/permissionless access, peer-to-peer transactions, decentralization, public verifiability, immutability, and borderless functionality.
- The DeFi stack consists of multiple layers: Settlement Layer, Asset Layer, Protocol Layer, Application Layer, and Aggregation Layer.
- Decentralized lending and borrowing platforms operate through smart contracts, removing the need for intermediaries and traditional credit checks.
- DeFi loans are typically overcollateralized, eliminating moral hazard and reducing risks for lenders.
- Decentralized exchanges (DEXes) allow users to trade tokens without intermediaries by relying on liquidity pools rather than traditional order books.

This work is released under a Creative Commons Attribution 4.0 International (CC BY 4.0) License © University of Nicosia, Institute for the Future, unic.ac.cy/blockchain

Session: Decentralized Finance (DeFi)

6. Further reading

Further Reading

DeFi Concepts:

- Intro to DeFi
- DeFi Stack
- Blockchain Layer 1 protocols
- dLending and dBorrowing
- What is an Automated Market Maker?
- Decentralised finance and automated market making: Execution and speculation

Comparing Centralized and Decentralized Exchanges:

- CEXes vs DEXes: What's the difference?
- CEX vs DEX: A Comprehensive Comparison of Features

This work is released under a Creative Commons Attribution 4.0 International (CC BY 4.0) License © University of Nicosia, Institute for the Future, unic.ac.cy/blockchain

UNIVERSITY *of* NICOSIA

Questions?

Contact Us:

Twitter: @mscdigital
Course Support:
digitalcurrency@unic.ac.cy
IT & Live Session Support: dl.it@unic.ac.cy